Talon aiguille [2012]

By Georges Mohasseb

Description:

Talon aiguille is made of liquid metal using dry casting technique developed by a local craftsman, also available in solid wood finish with cast brass legs.

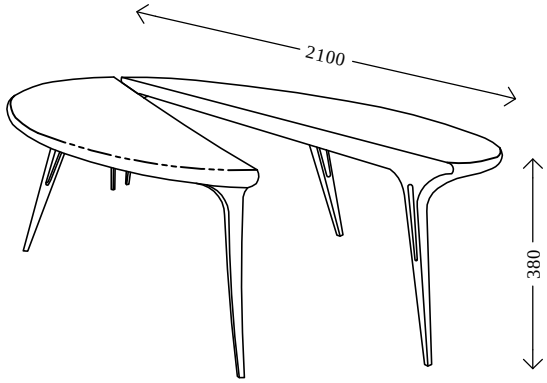
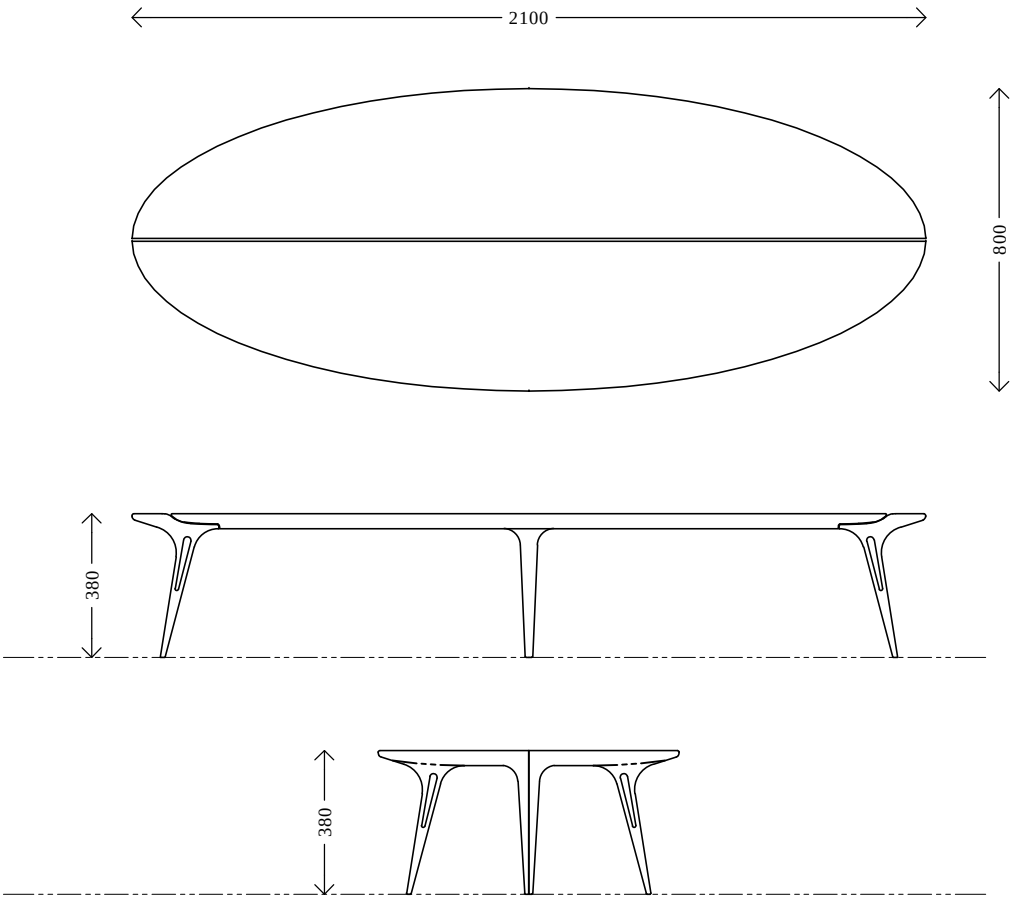
Dimensions:	Materials:
Length: 210 cm	Casted Metal
Width: 80 cm	Slid Wood
Height: -38 cm	/